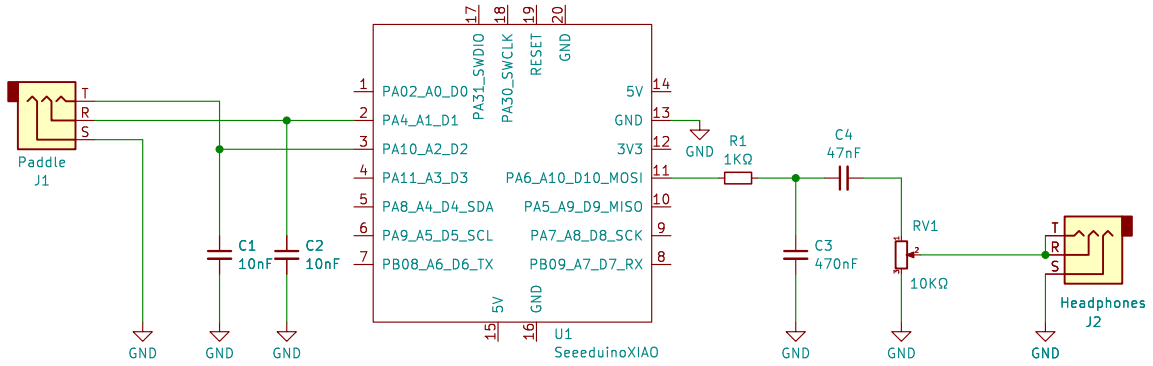

Ullrich von Bassewitz

Sheet: /

File: vail-adapter.kicad_sch

Title: DF5WC Vail Adapter

Size: A5	Date: 2025-07-18	**Rev: 1.0**
KiCad E.D.A. eeschema 7.0.11-7.0.11~ubuntu22.04.1		Id: 1/1